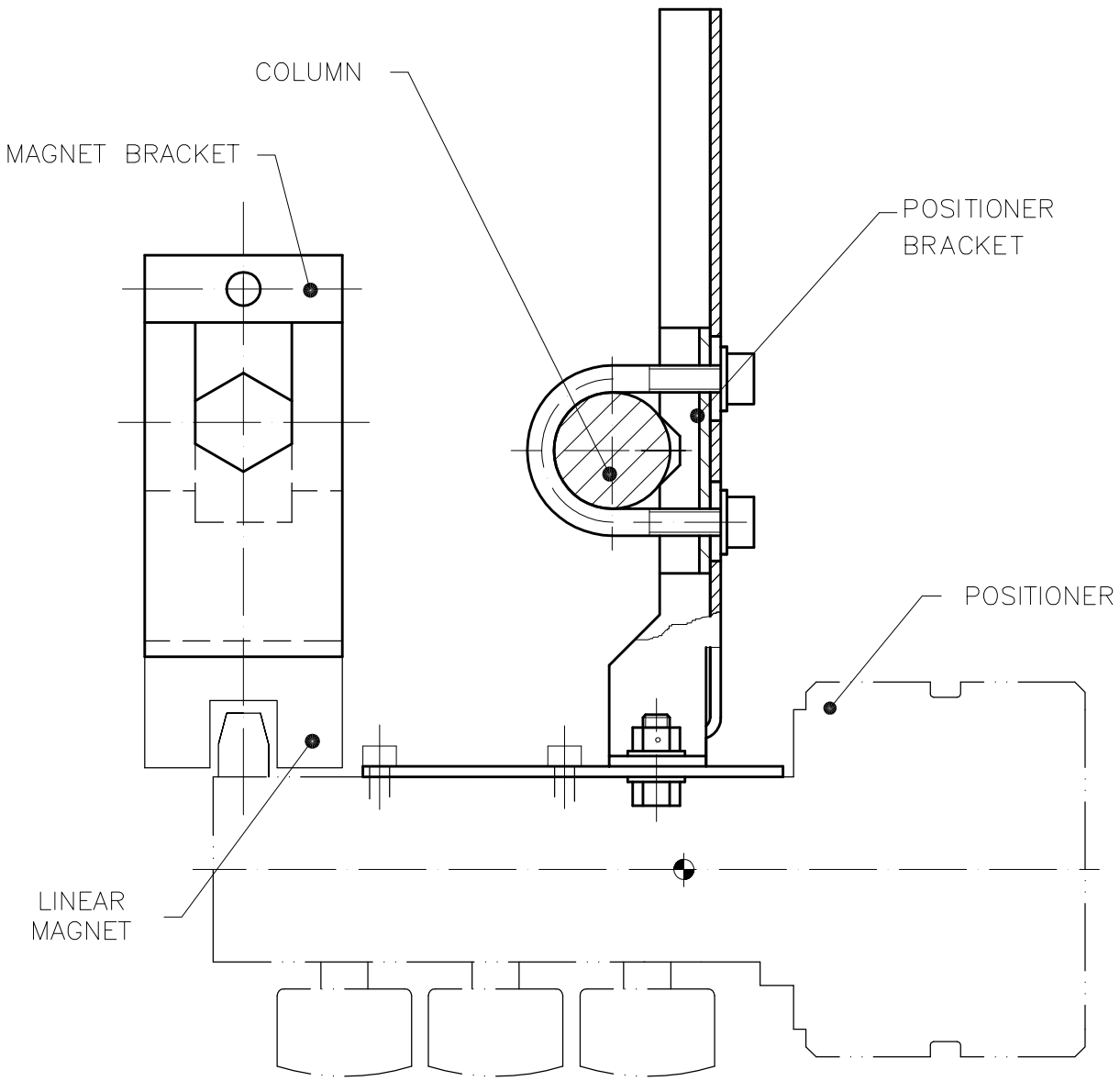

ITEM	QUANT	UNIT	DESCRIPTION	MATERIAL	WEIGHT	REF. DESIGN

REV	DESIGN	APPROVED	AREA
	/ /	/ /	
	/ /	/ /	
	/ /	/ /	
	/ /	/ /	

RONALDO 11/09/2003	RONALDO 11/09/2003	IVAN 11/09/2003	VALTER 11/09/2003

smar

CLIENT

EQUIPMENT BFY UNIVERSAL BRACKET

FY POSITIONERLINEAR BRACKET

DIMENSIONAL – MOUNTING ON COLUMN ACTUATOR

OS

DESIGN N° 101–A–7334–00

SCALE | SHEET